MOTEURS Baudouin

X31

Gearbox for 6M33.2

X31
Gearbox for 6M33.2

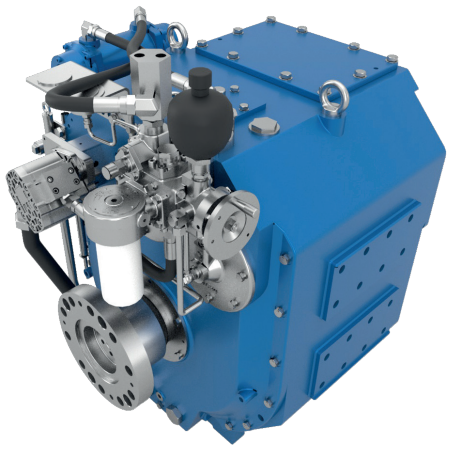

X31			
Power/RPM kW/RPM (hp/RPM)	Maximum rated input kW (hp)	Ratio	Maximum input RPM
0,316 (0,429)	727 (974)	4,034*	2300
		4,444	
		5,074*	
		5,560	
		6,000	
Dry Weight kg(lb)	1100 (2425)		
SAE bell	#1		
Type	Vertical offset		
Kinematics	Reversible (Engine Wise and Counter Engine Wise)		

* Non standard ratio

Sample Powers (kw/hp)

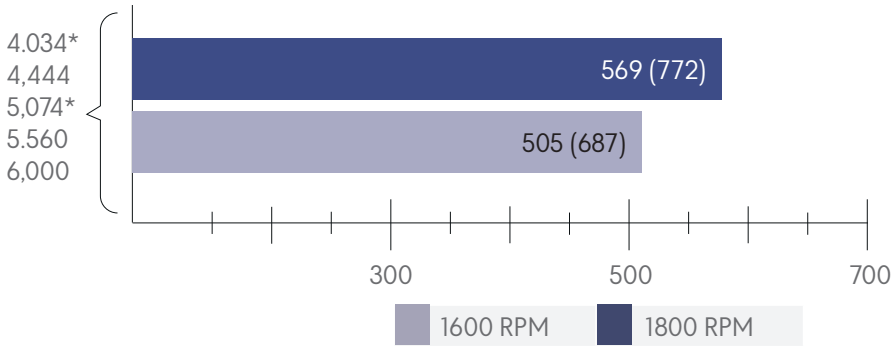

Description

Robust design and easy onboard maintenance.Robust design also withstands continuous duty in workboat, dredger applications

Fully tested, reliable and simple to install

Reverse reduction marine transmission with hydraulically actuated multi-disc clutches

Case hardened and precise ground gear teeth for long life and smooth running

Robust cast iron casing for direct or remote mounting

Emergency “get home” capability

Suitable for twin installation with 100% rated power in ahead and astern condition

Standard Equipment

Oil cooler complete with fittings and flexible hoses

Flanged coupling

Lube oil pump

Elastic coupling with fail safe device SAE14"

Rigid mounting brackets

Propeller shaft flange and coupling bolt set

Classification by all major Classification Societies on request

Electric clutch control

Set Control Monitoring:
Manometer and themometer gauges
Clutch oil pressure sensor monitored by the control system
Low clutch pressure alarm switch monitored by the engine BMS

Options

Live PTO Type: 0 / Ratio: 0,791/1 / flange SAE B
Clutchable PTO Type: 1 for one output Electrical valve control 24V / Ratio : 0,679/1 - 0,83/1 - 0,981/1
Clutchable PTO Type: 2 for two outputs / Electrical valve control 24V / Ratio: To be defined
Hydraulic pump adaptation flange and coupling, not machined for type; 1&2 (to be machined by consumer)

Dimensions and dry weight (mm/kg)

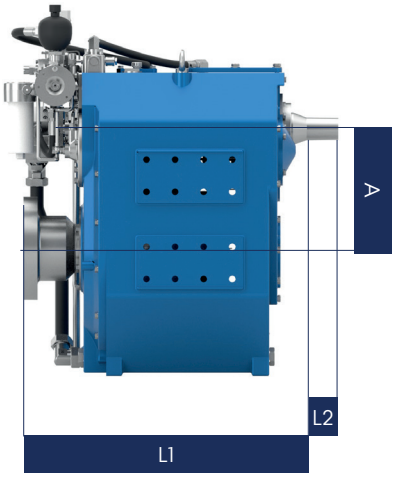

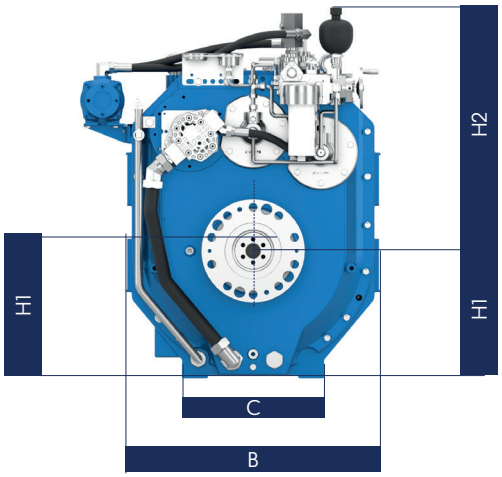

Model	Bell housing	A	B	C	H1	H2	H3	L1	L2	L3	Dry Weight kg(lb)
X31	#1	370	880	440	395 (495)	754 (654)	0	885	90	970	1000 (2200)

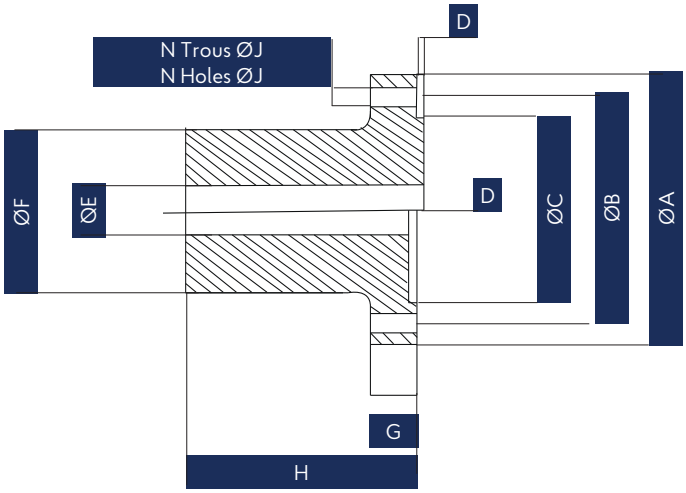

Flange Coupling Dimension												
Type	ØA	ØB +0.15 /-0.15	ØC	D	ØE	ØF	G	H	J	N	Ømaxi forage Ømaxi drilling	CENTRAGE CENTERING
X31	320	270	175	6	50	220	42	255	27.5	10	140	Male